BATHSELECT BRUSHED NICKEL CONTEMPORARY COMMERCIAL AUTOMATIC WATERFALL SENSOR FAUCET SPECS

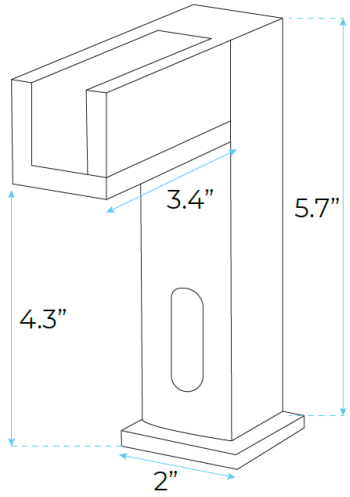

Specs:

- Power: DC:6V(4AA alkaline battery)
- AC:220V-240V; 50/60HZ
- Water Consumption: 0.05-1.6Mpa
- Detection Zone: 16-32 cm or adjustable
- Battery lifespan: 100000 cycles
- Static Power Consumption: 0.36mw
- Working Power consumption: 0.5mw
- Inductive Opening Time: < 1 second
- Inductive Closing Time: < 2 second
- Dia.of inlet / outlet pipe: G1/2"
- Temperature: 0.1-50°/C
- Flow rate (L / Min): 8L / Min
- Applicable water pressure(MPa): 0.05-0.8
- LED Color: Cold water-Blue light; Warm water-Green light; Hot water-Red light.